JOLICO J-B TOOL

PRINTED COPY IS UNCONTROLLED

CAM GAS SPRING RETURN BLOCKS AND PLATE

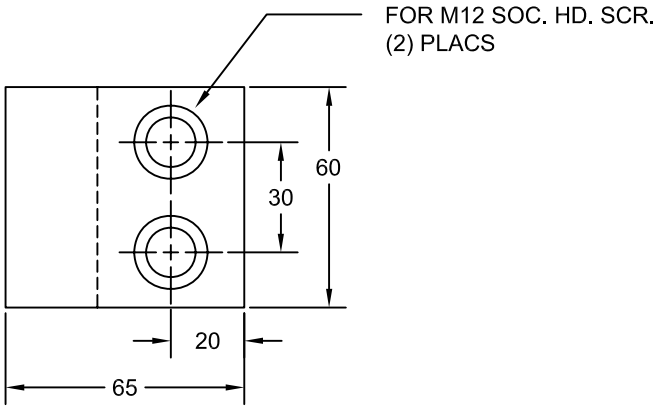

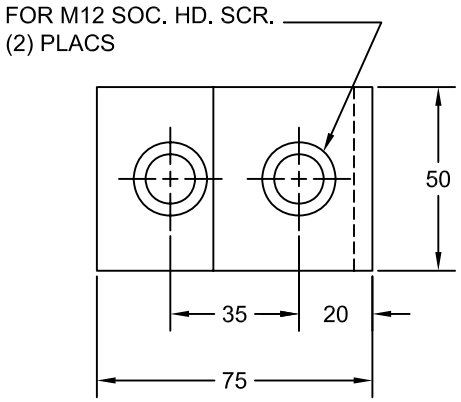

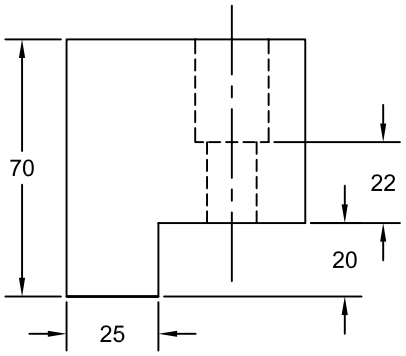

CAM GAS SPRING RETURN BLOCK

JOLICO NUMBER	FORD PART NUMBER
J - 449200	WDX7-65-1201

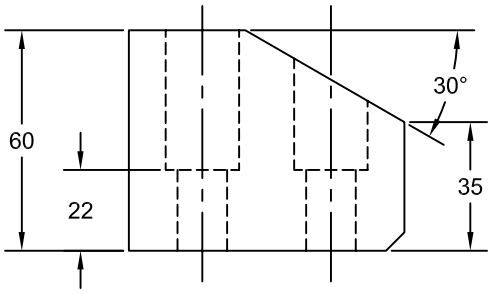

CAM GAS SPRING RETURN BLOCK

JOLICO NUMBER	FORD PART NUMBER
J - 449201	WDX7-65-1202

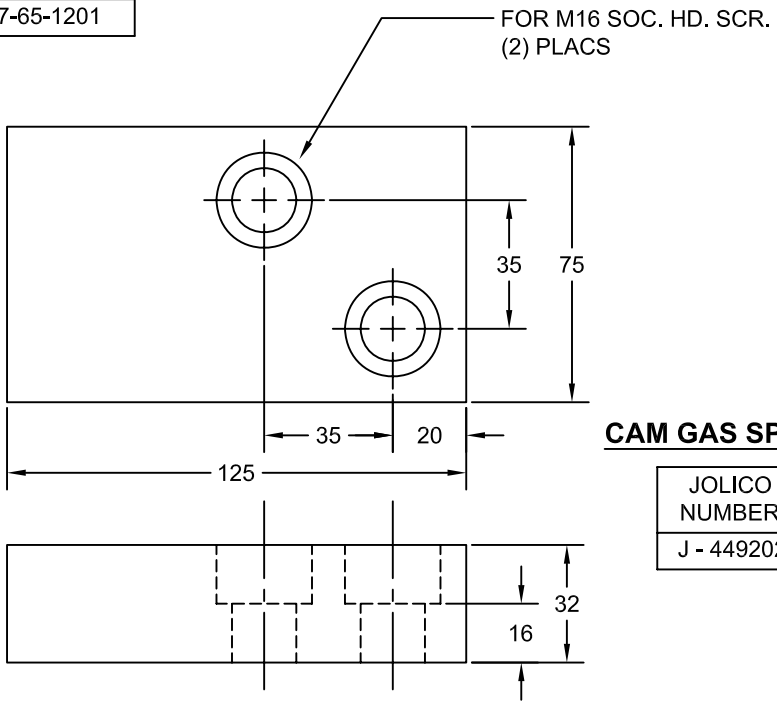

CAM GAS SPRING RETURN PLATE

JOLICO NUMBER	FORD PART NUMBER
J - 449202	WDX7-65-1203